01 Description

File: 01 Description.kicad_sch

02 Block

File: 02 Block.kicad_sch

03 USBC & Power

File: 03 USBC & Power.kicad_sch

04 ESP32

File: 04 ESP32.kicad_sch

05 SPI to Ethernet

File: 05 SPI to Ethernet.kicad_sch

06 Audio

File: 06 Audio.kicad_sch

07 LED & Button

File: 07 LED & Button.kicad_sch

08 RS-232

File: 08 RS-232.kicad_sch

seeed studio

Sheet: /
File: HA Proxy W5500.kicad_sch

Title: HA Proxy W5500

Size: A3	Date: 2025-12-25	**Rev: v0.9**
KiCad E.D.A. 9.0.0		Id: 1/9

Version	Descriptions	Date
v0.9	Initial version	2025/11/20
	1. Page3: ESP32 firmware auto-download circuit: Replace the TTL with MOSFET. 2. Page6: Audio Codec Changes to PCM5122 3. Page8: Add a 1MΩ resistor and a 1nF capacitor to solve the ESD issue. 4. PCB: Adjust the layout	2026/2/26
	1. Page9: Adjust RS-485 T/R switching Control Method.	2026/2/27
	1. Remove RS-485 function. 2. USB C Host changes to USB A. 3. An RS-232 interface is converted from a 3.5mm jack to a DB9 interface. 4. The signal of a 3.5mm interface is converted from RS-232 to TTL.	2026/3/2
	1. Adjust the GPIOs of SPI.	2026/3/4
	1. Add a toggle switch to switch TX/RX signal on the 3.5mm jack. 2. Add a toggle switch to switch TX/RX signal on the DB9.	2026/4/1

Block Diagram

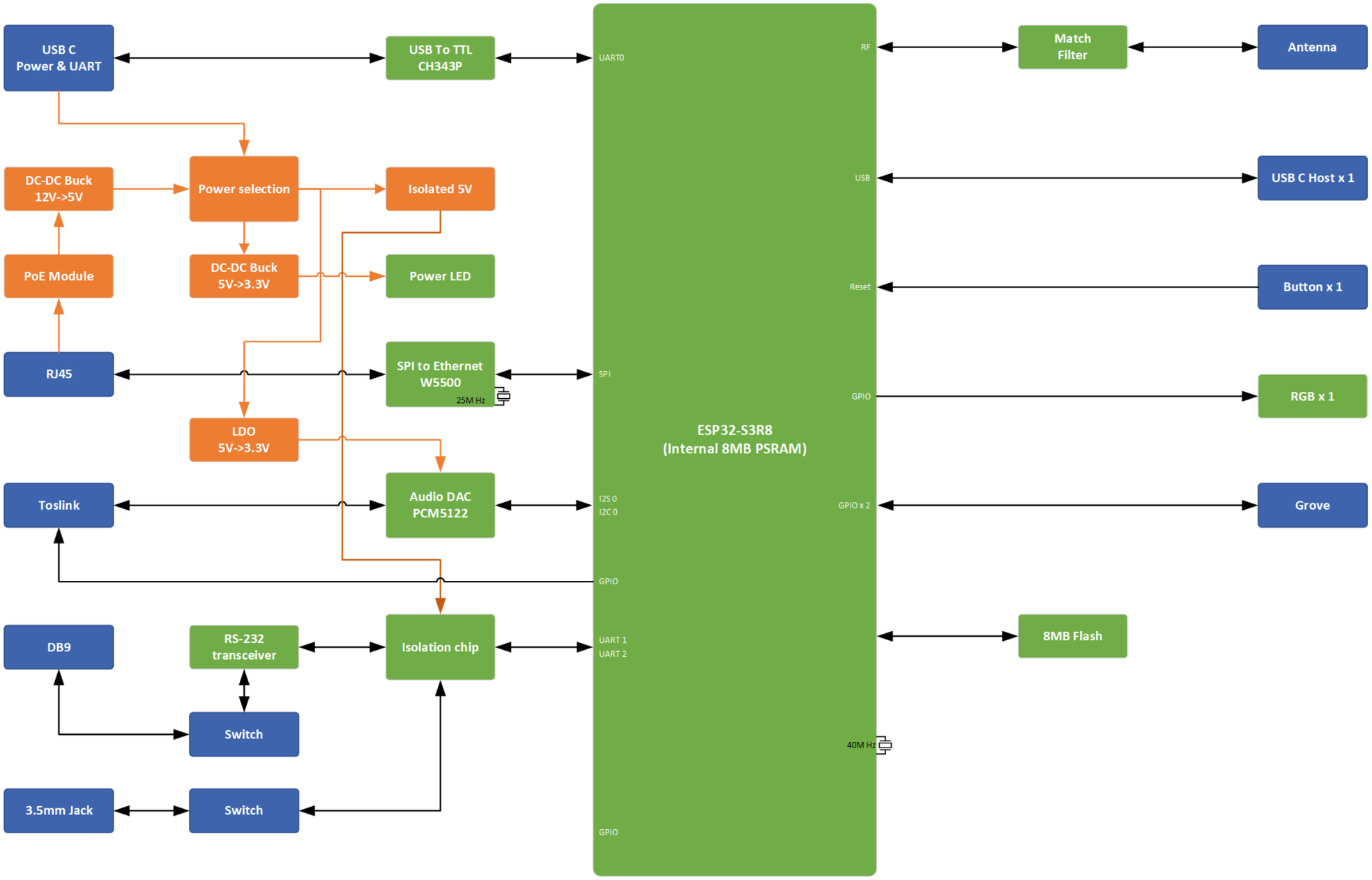

seeed studio

Sheet: /02 Block/
File: 02 Block.kicad_sch

Title:

Size: A3	Date:	Rev:
KiCad E.D.A. 9.0.0		Id: 2/9

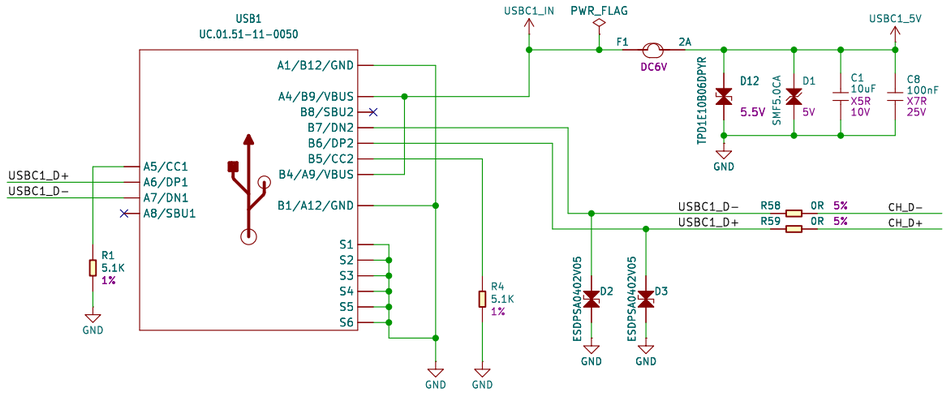

USB Device & Power IN

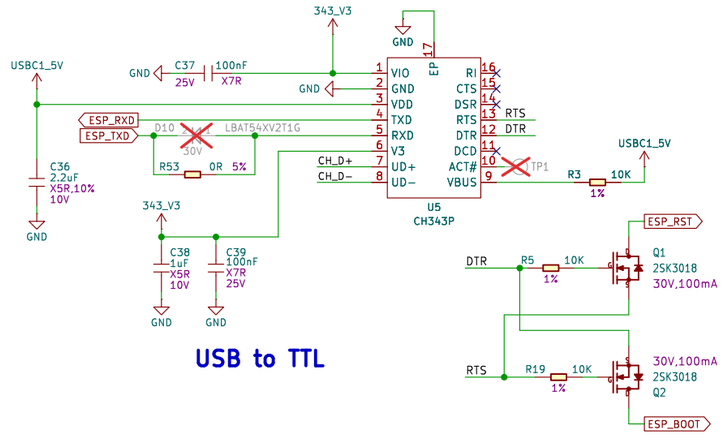

USB to TTL

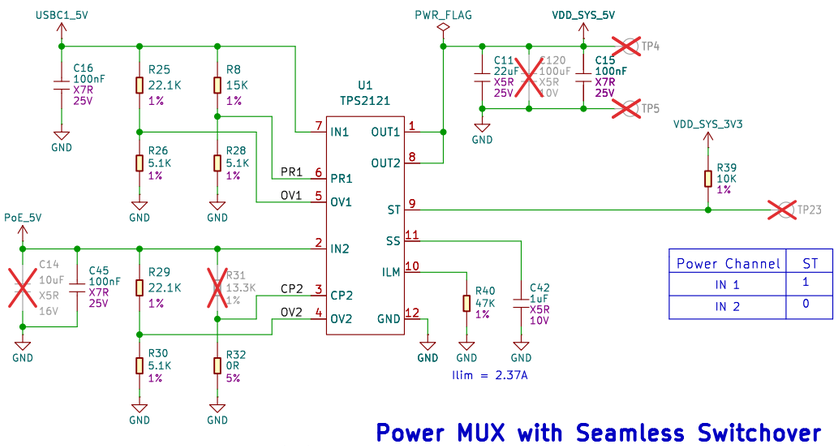

Power Channel	ST
IN 1	1
IN 2	0

Power MUX with Seamless Switchover

Overvoltage Supervisor (OVx):

Vin_max(TYP) = (R25+R26) * Vov / R26
= (22.1K+5.1K) * 1.06 / 5.1K
= 5.653V

Vin_max: 5.387V - 5.867V

Priority Supervisor (PR1):

Vin_min = (R8+R28) * Vov / R28
= (15K+5.1K) * 1.06 / 5.1K
= 4.17V

Vin_min: 3.98V - 4.33V

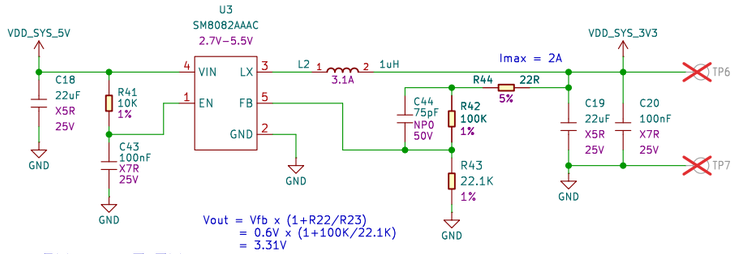

5V -> 3.3V

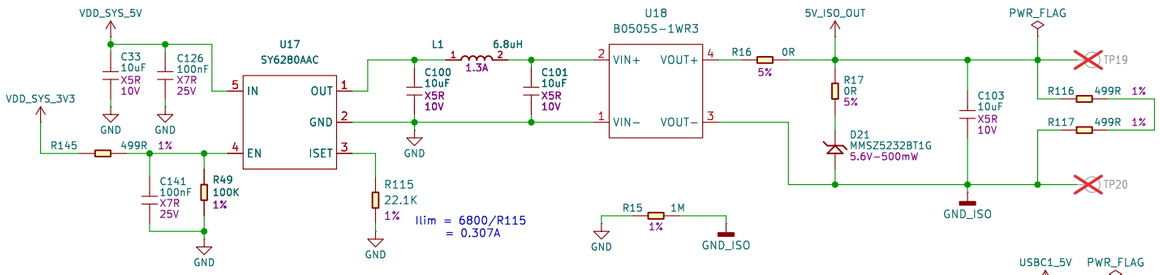

Isolated 5V

USBC1_5V PWR_FLAG 343_V3 PWR_FLAG VDD_SYS_3V3 PWR_FLAG PWR_FLAG PWR_FLAG

seeed studio

Sheet: /03 USBC & Power/
File: 03 USBC & Power.kicad_sch

Title:

Size: A3	Date:	Rev:
KiCad E.D.A. 9.0.0		Id: 3/9

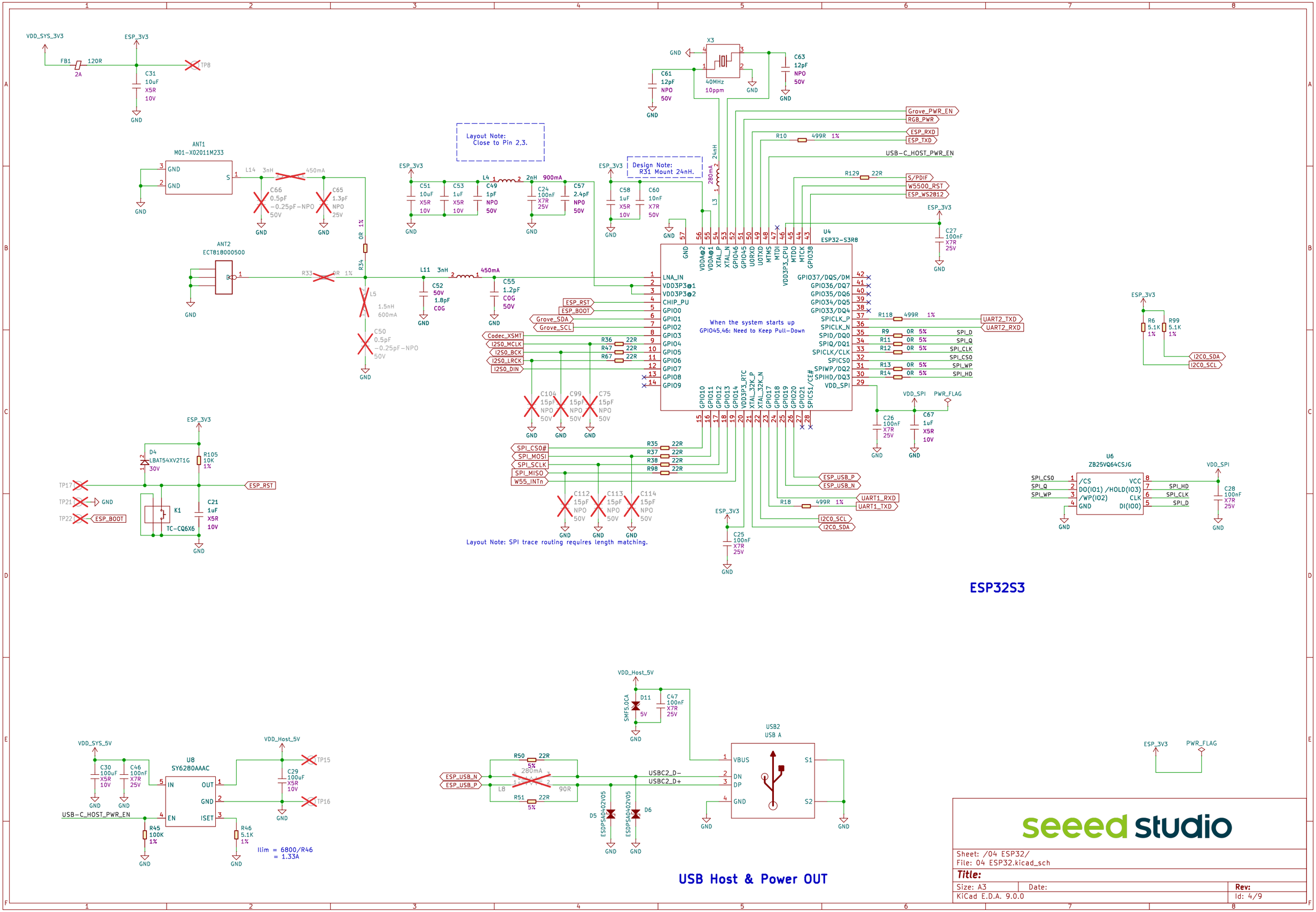
VDD_SYS_3V3
ESP_3V3
FB1 120R 2A
C31 10uF X5R 10V
TP8
GND
ANT1
M01-X02011M233
L14 3nH 450mA
C66 0.5pF -0.25pF-NPO 50V
C65 1.3pF NPO 25V
ANT2
ECT818000500
R33 0R 1%
R34 0R 1%
L5 1.5nH 600mA
C50 0.5pF -0.25pF-NPO 50V
L11 3nH 450mA
C52 50V 1.8pF C0G
C55 1.2pF C0G 50V
Layout Note:
Close to Pin 2,3.
C51 10uF X5R 10V
C53 1uF X5R 10V
L4 2nH 900mA
C49 1pF NPO 50V
C24 100nF X7R 25V
C57 2.4pF NPO 50V
C58 1uF X5R 10V
C60 10nF X7R 50V
Design Note:
R31 Mount 24nH.
L3 24nH 280mA
X3 40MHz 10ppm
C61 12pF NPO 50V
C63 12pF NPO 50V
U4
ESP32-S3R8
LNA_IN
VDD3P3@1
VDD3P3@2
CHIP_PU
GPIO0
GPIO1
GPIO2
GPIO3
GPIO4
GPIO5
GPIO6
GPIO7
GPIO8
GPIO9
GPIO10
GPIO11
GPIO12
GPIO13
GPIO14
VDD3P3_RTC
XTAL_32K_P
XTAL_32K_N
GPIO17
GPIO18
GPIO19
GPIO20
GPIO21
SPICS1/CE#
VDD3P3@1
VDD3P3@2
VDDA@2
VDDA@1
XTAL_P
XTAL_N
GPIO46
GPIO45
U0RXD
U0TXD
MTMS
MTDI
VDD3P3_CPU
MTDO
MTCK
GPIO38
GPIO37/DQS/DM
GPIO36/DQ7
GPIO35/DQ6
GPIO34/DQ5
GPIO33/DQ4
SPICLK_P
SPICLK_N
SPID/DQ0
SPIQ/DQ1
SPICLK/CLK
SPICS0
SPIWP/DQ2
SPIHD/DQ3
VDD_SPI
When the system starts up
GPIO45,46: Need to Keep Pull-Down
ESP_RST
ESP_BOOT
Grove_SDA
Grove_SCL
Codec_XSMT
I2S0_MCLK
I2S0_BCK
I2S0_LRCK
I2S0_DIN
R36 22R
R47 22R
R67 22R
C104 15pF NPO 50V
C99 15pF NPO 50V
C75 15pF NPO 50V
SPI_CS0#
SPI_MOSI
SPI_SCLK
SPI_MISO
W55_INTn
R35 22R
R37 22R
R38 22R
R98 22R
C112 15pF NPO 50V
C113 15pF NPO 50V
C114 15pF NPO 50V
Layout Note: SPI trace routing requires length matching.
Grove_PWR_EN
RGB_PWR
ESP_RXD
ESP_TXD
R10 499R 1%
USB-C_HOST_PWR_EN
R129 22R
S/PDIF
W5500_RST
ESP_WS2812
C27 100nF X7R 25V
R118 499R 1%
UART2_TXD
UART2_RXD
R9 0R 5%
R11 0R 5%
R12 0R 5%
R13 0R 5%
R14 0R 5%
SPI_D
SPI_Q
SPI_CLK
SPI_CS0
SPI_WP
SPI_HD
C26 100nF X7R 25V
C67 1uF X5R 10V
PWR_FLAG
ESP_USB_P
ESP_USB_N
R18 499R 1%
UART1_RXD
UART1_TXD
I2C0_SCL
I2C0_SDA
C25 100nF X7R 25V
R6 5.1K 1%
R99 5.1K 1%
U6
ZB25VQ64CSJG
/CS
DO(IO1)
/WP(IO2)
GND
VCC
/HOLD(IO3)
CLK
DI(IO0)
C28 100nF X7R 25V
D4 LBAT54XV2T1G 30V
R105 10K 1%
TP17
TP21
TP22
K1 TC-CQ6X6
C21 1uF X5R 10V
ESP32S3
VDD_SYS_5V
U8
SY6280AAAC
IN
OUT
GND
EN
ISET
C30 100uF X5R 10V
C46 100nF X7R 25V
C29 100uF X5R 10V
TP15
TP16
R45 100K 1%
R46 5.1K 1%
Ilim = 6800/R46
= 1.33A
VDD_Host_5V
D11 SMF5.0CA 5V
C47 100nF X7R 25V
R50 22R 5%
R51 22R 5%
L8 280mA 90R
USBC2_D-
USBC2_D+
D5 ESDPSA04-02V05
D6 ESDPSA04-02V05
USB2
USB A
VBUS
DN
DP
S1
S2
USB Host & Power OUT
seeed studio
Sheet: /04 ESP32/
File: 04 ESP32.kicad_sch
Title:
Size: A3
Date:
Rev:
KiCad E.D.A. 9.0.0
Id: 4/9

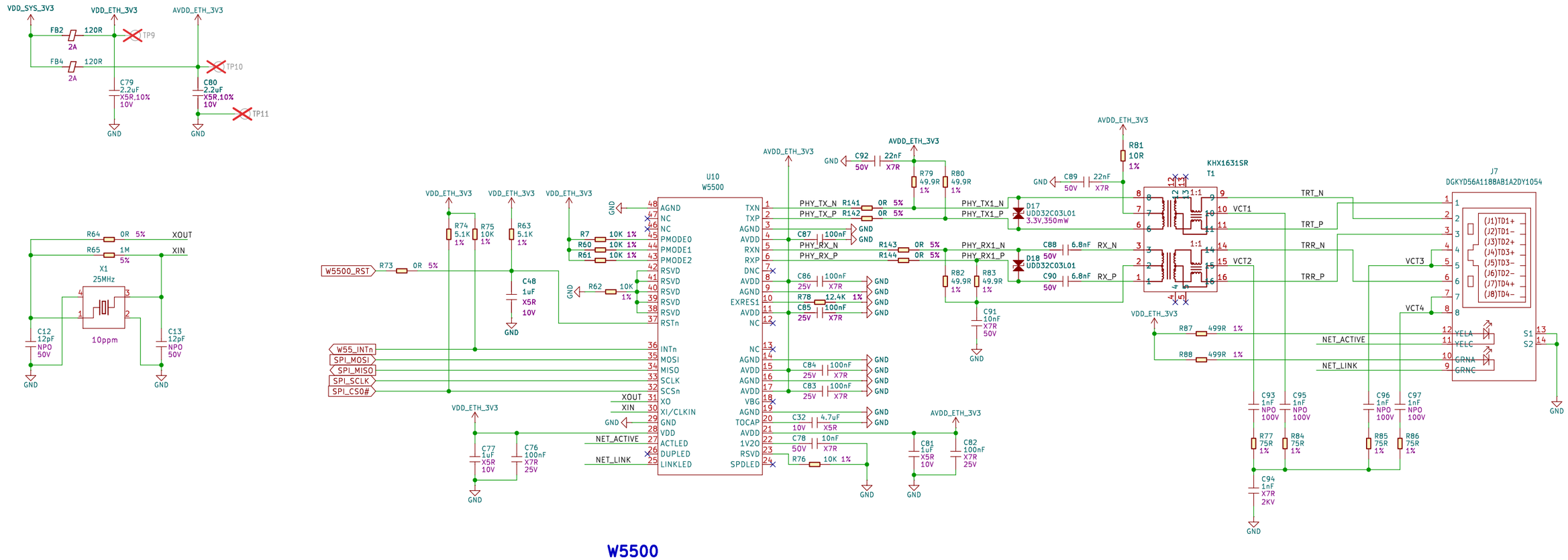

W5500

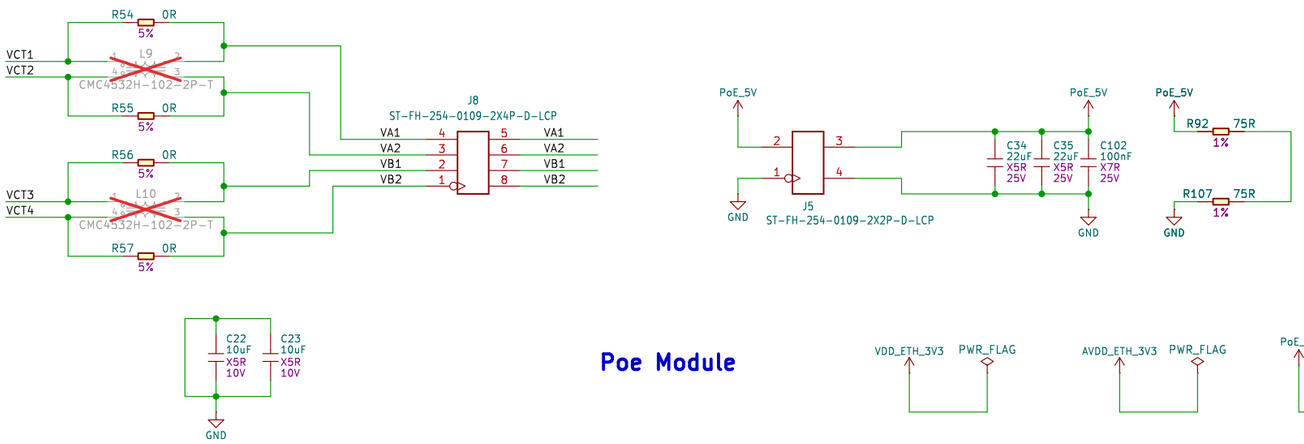

Poe Module

seeed studio

Sheet: /05 SPI to Ethernet/
File: 05 SPI to Ethernet.kicad_sch

Title:

Size: A3	Date:	Rev:
KiCad E.D.A. 9.0.0		Id: 5/9

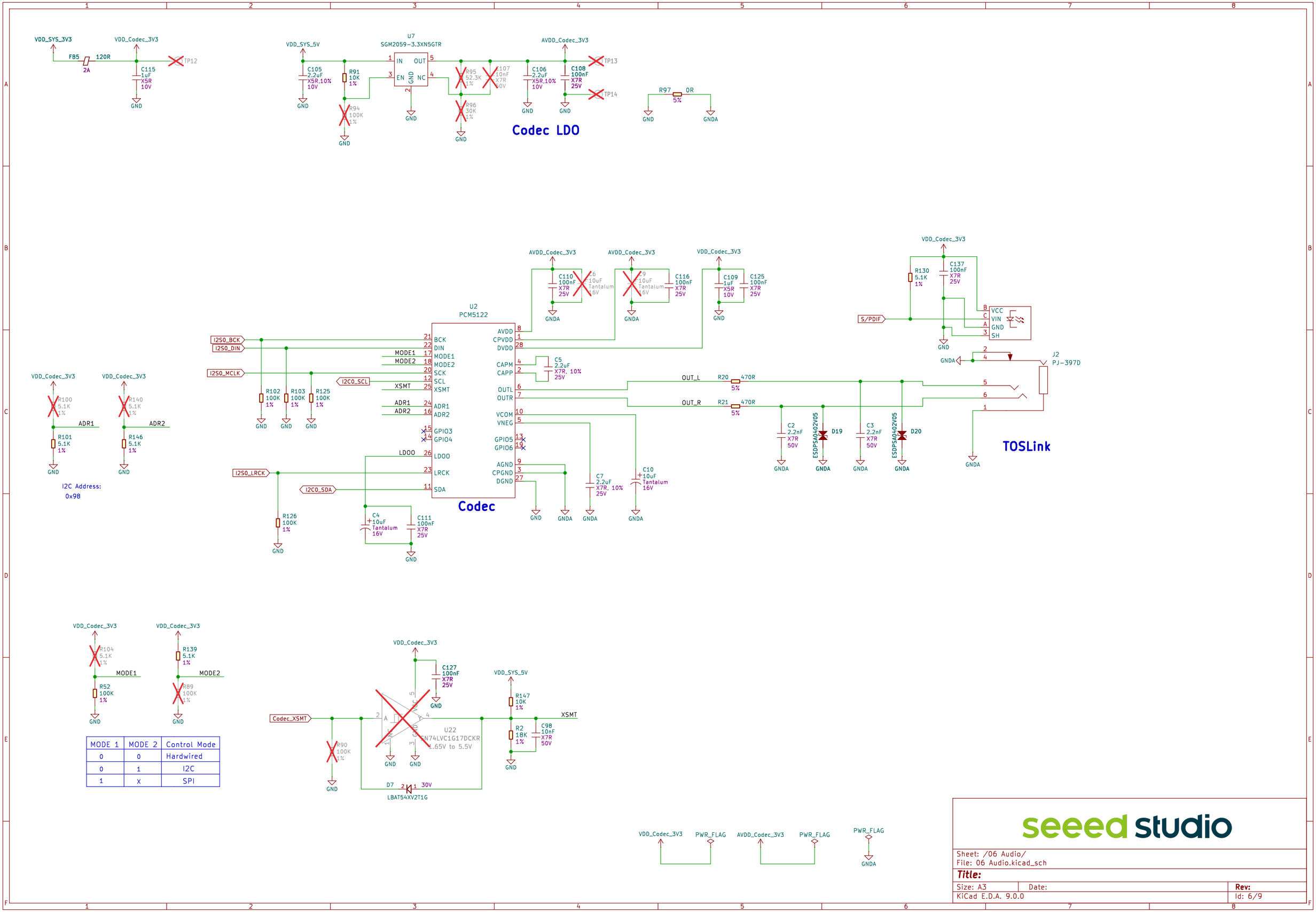

MODE 1	MODE 2	Control Mode
0	0	Hardwired
0	1	I2C
1	X	SPI

seeed studio

Sheet: /06 Audio/
File: 06 Audio.kicad_sch

Title:

Size: A3	Date:	Rev:
KiCad E.D.A. 9.0.0		Id: 6/9

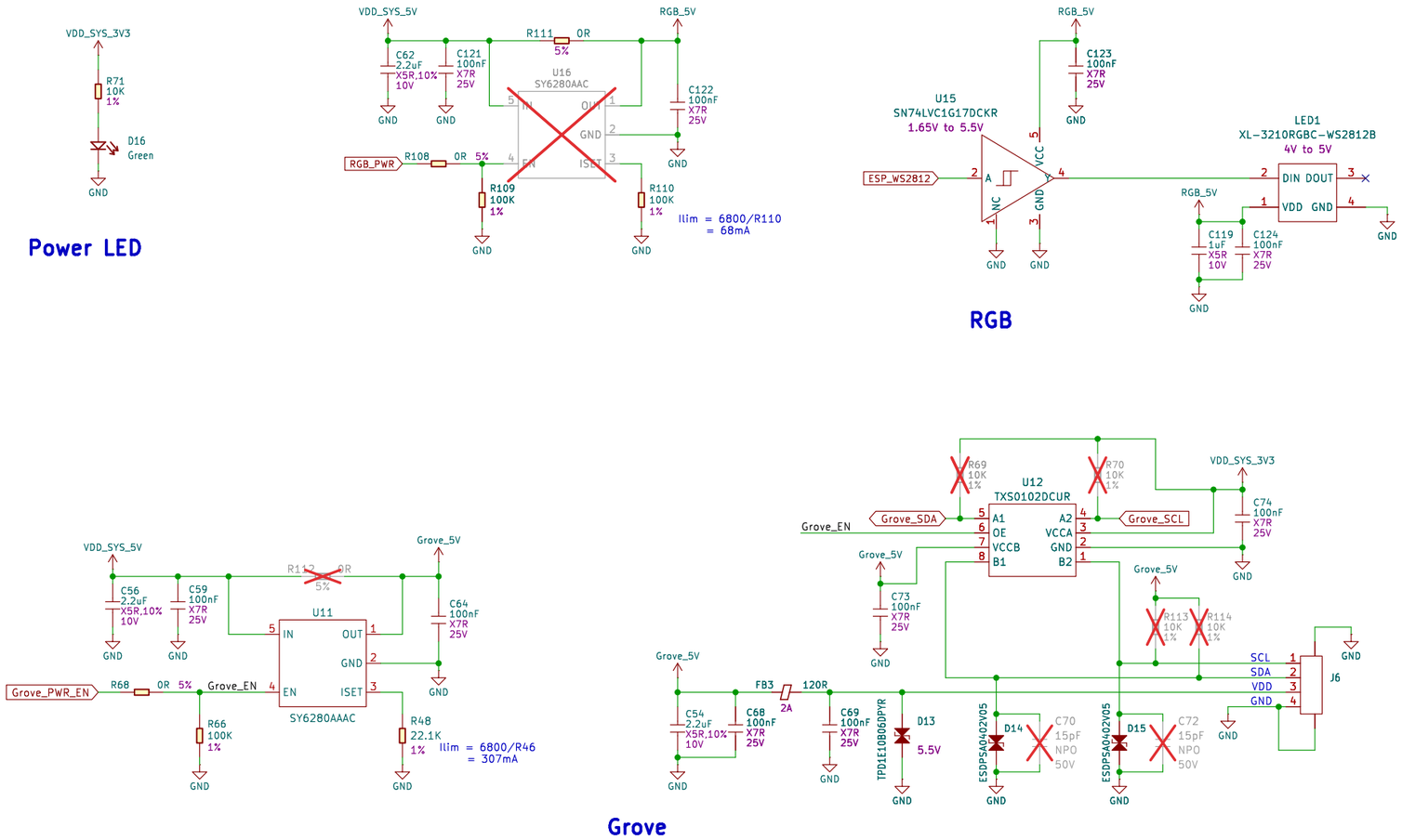

seeed studio

Sheet: /07 LED & Button/
File: 07 LED & Button.kicad_sch

Title:

Size: A3	Date:	Rev:
KiCad E.D.A. 9.0.0		Id: 7/9

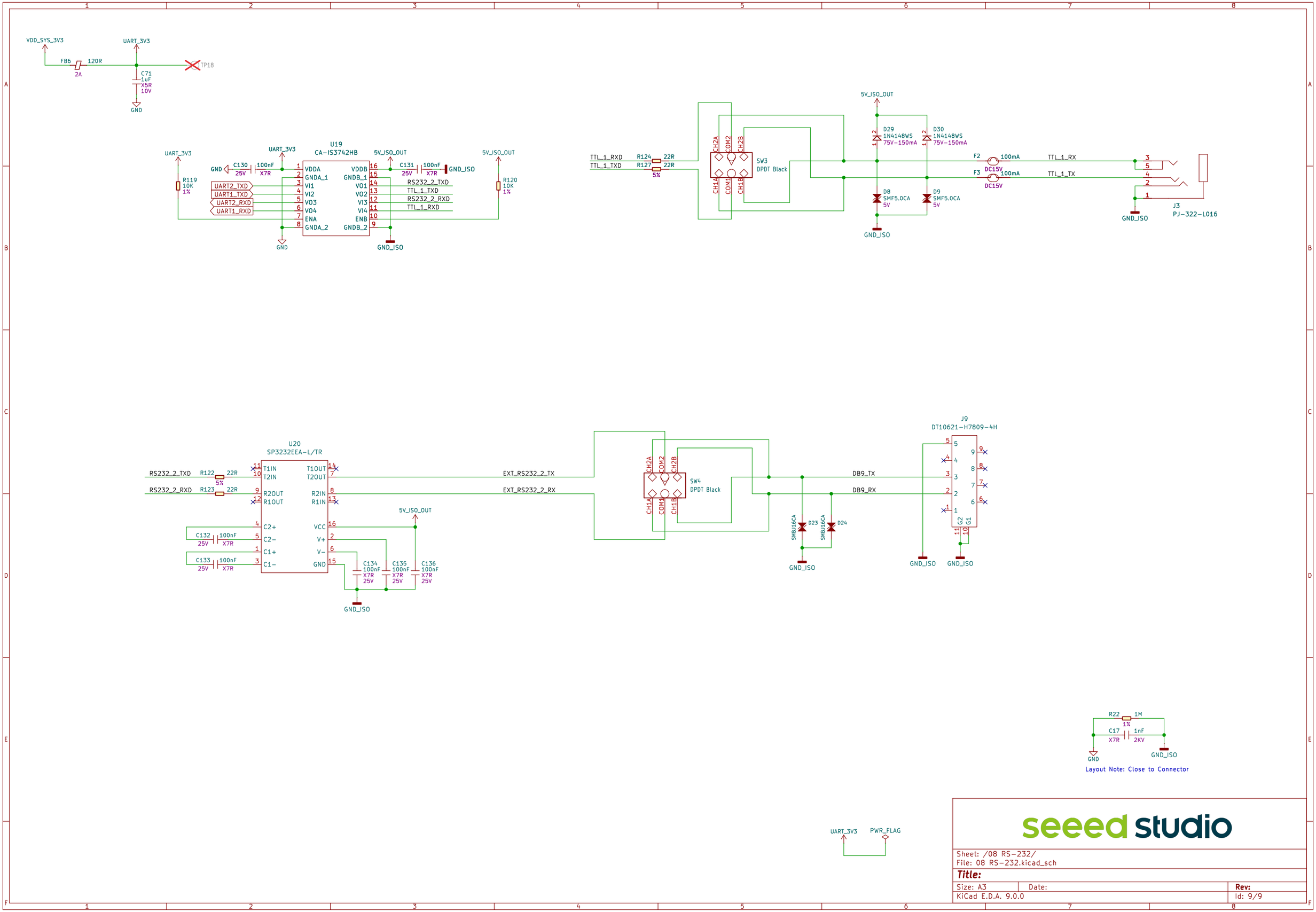

seeed studio

Sheet: /08 RS-232/
File: 08 RS-232.kicad_sch

Title:

Size: A3	Date:	Rev:
KiCad E.D.A. 9.0.0		Id: 9/9